SCM FRIGO
A BEIJER REF Company

PNC **Solutions**

I.R. Industrial Refrigeration
C.R. Commercial Refrigeration
Made in Italy

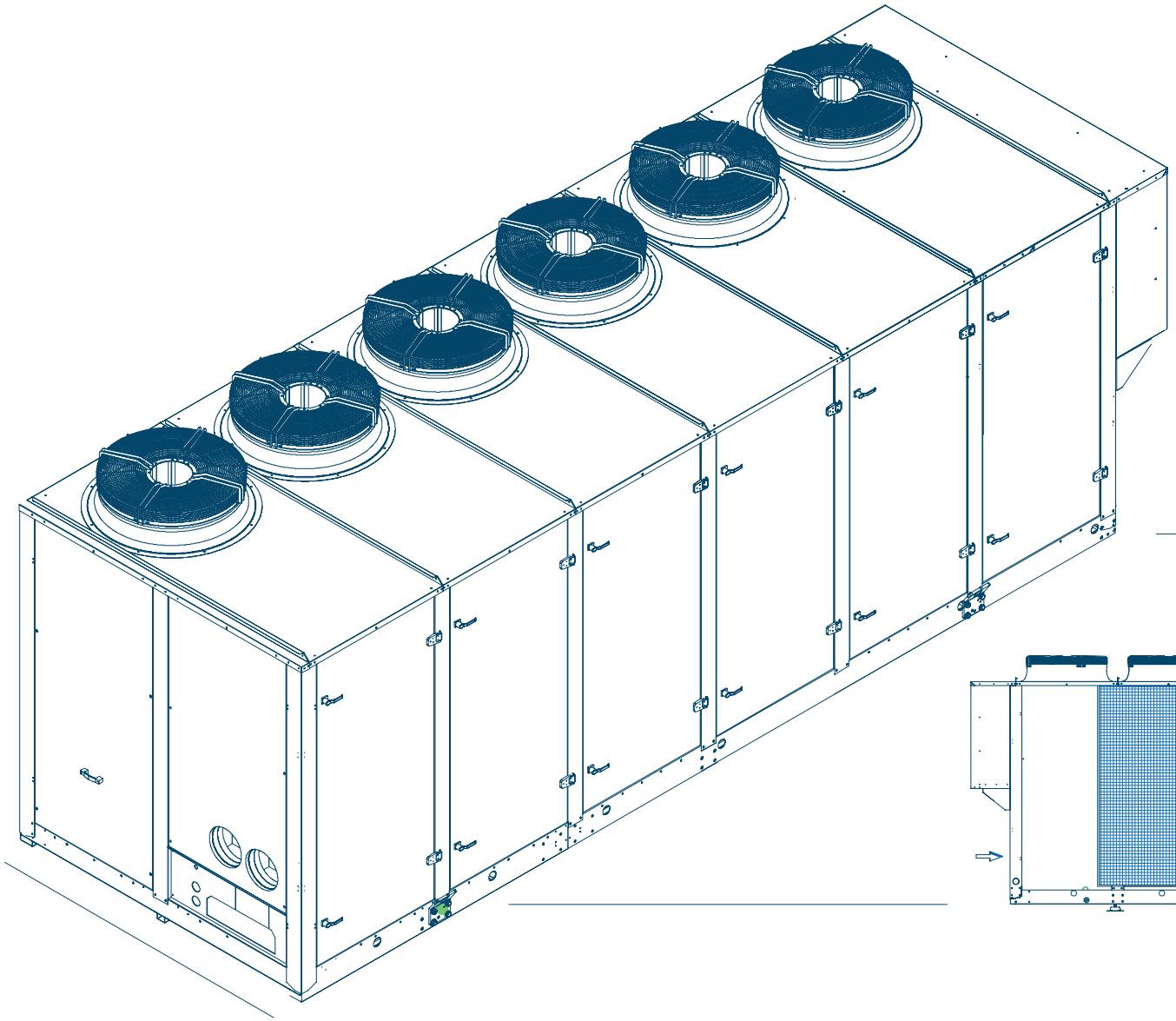

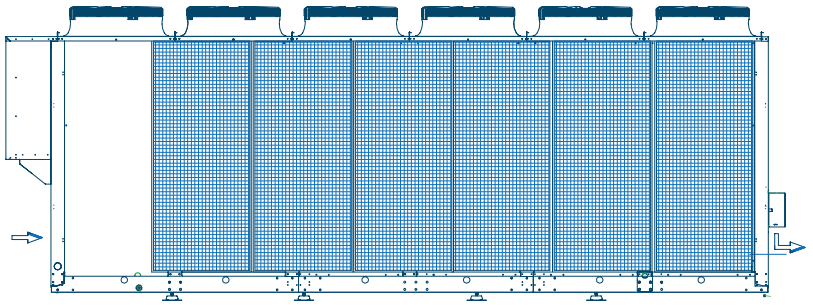

Eng

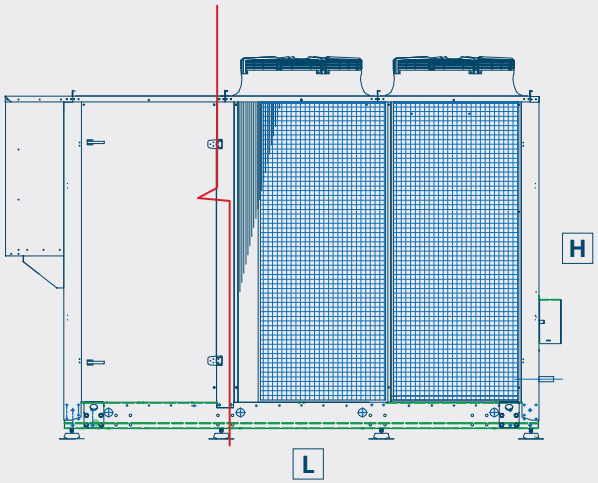

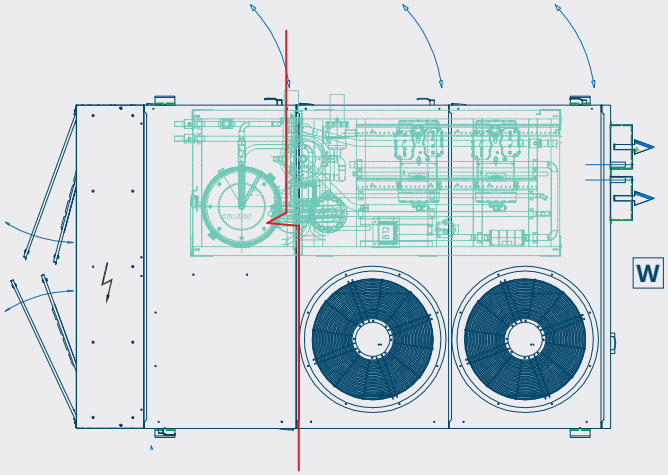

Dim.	L	W	H
2F+3M	3790	2340	2250
2F+4M	4830		

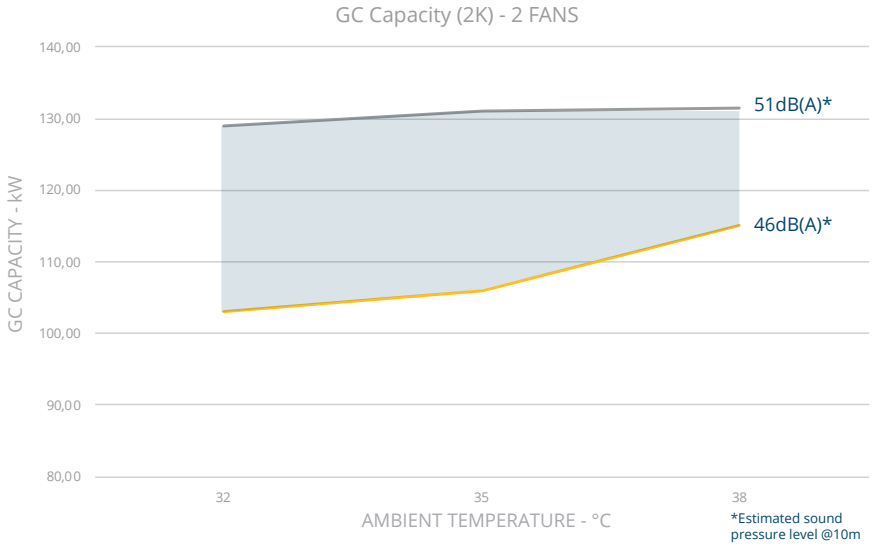

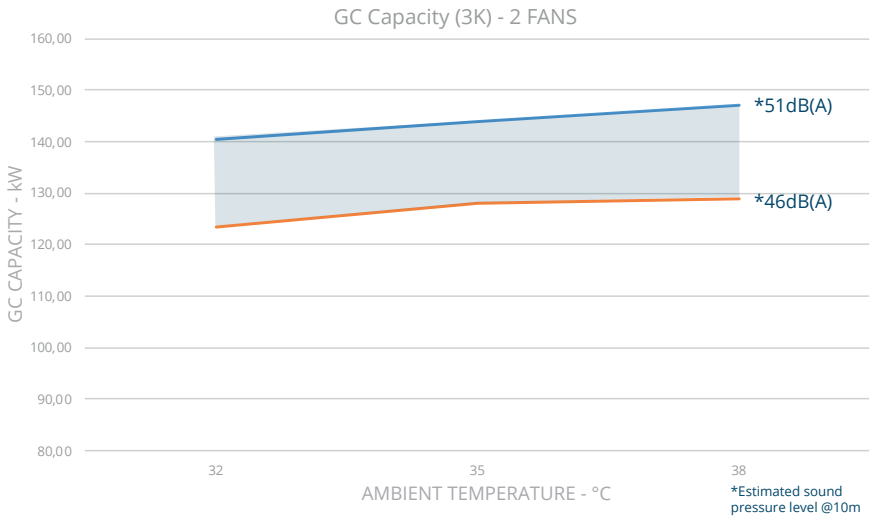

>EIA compliance up to 108kW

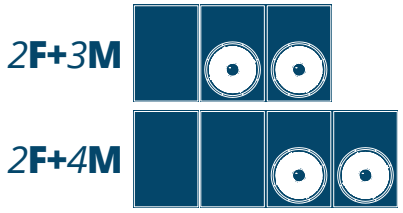

2 Fans

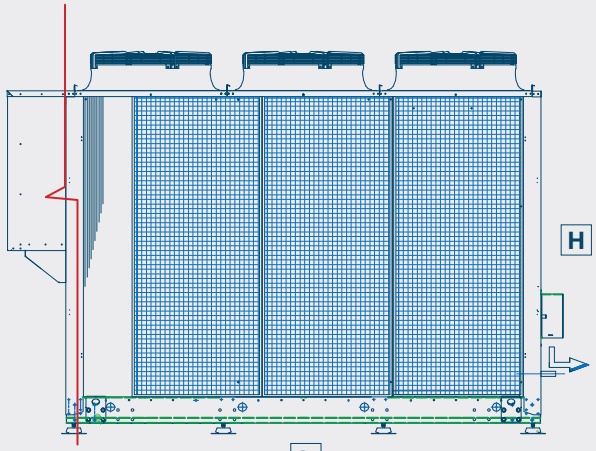

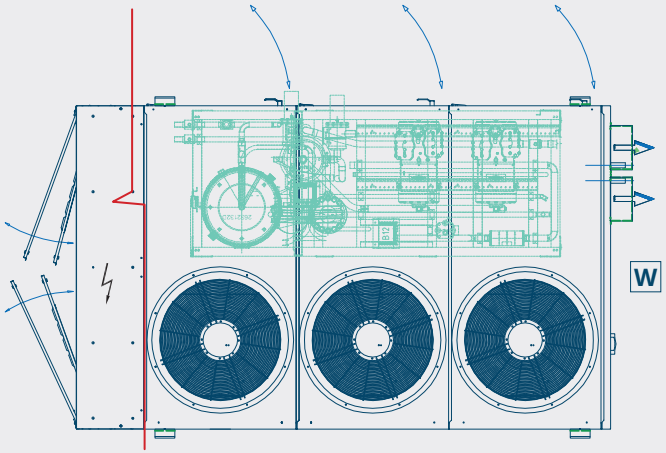

Dim.	L	W	H
3F+3M	3790	2340	2550
3F+4M	4830		
3F+5M	5870		

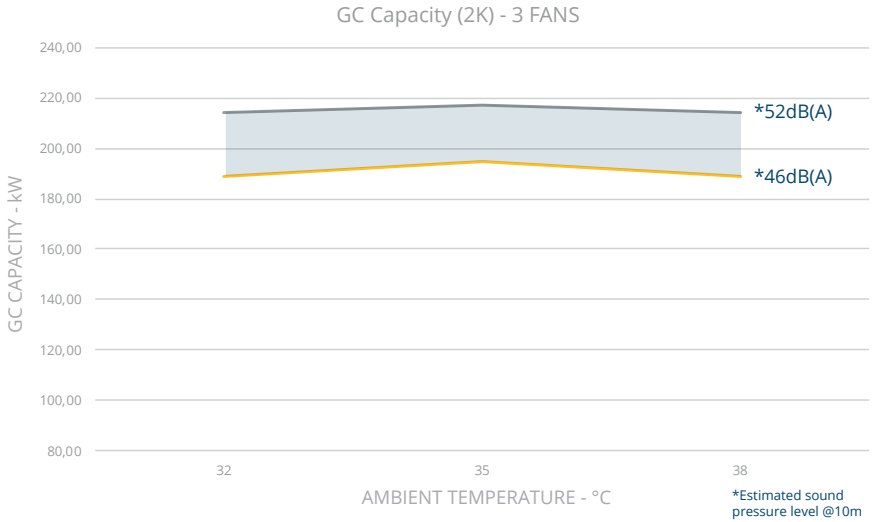

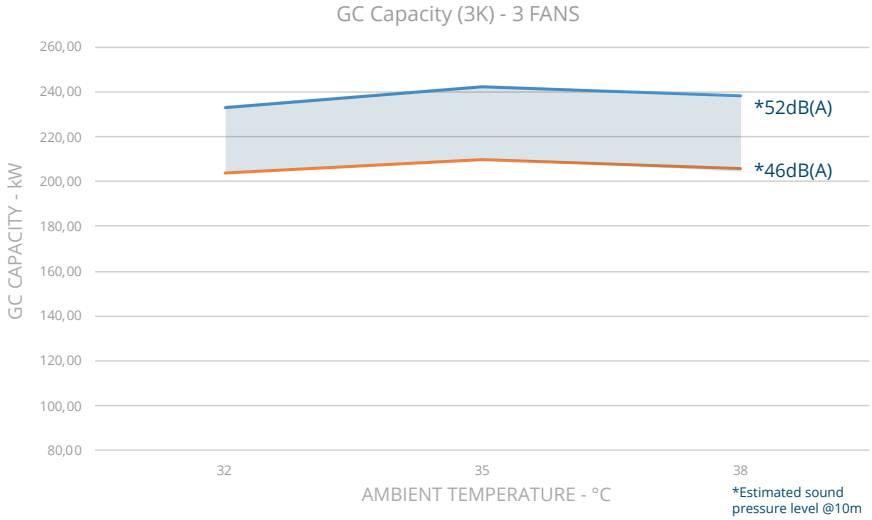

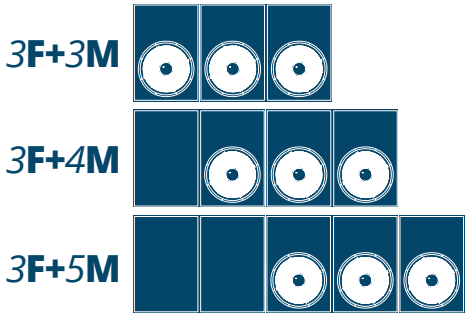

>EIA compliance up to 183kW

3 Fans

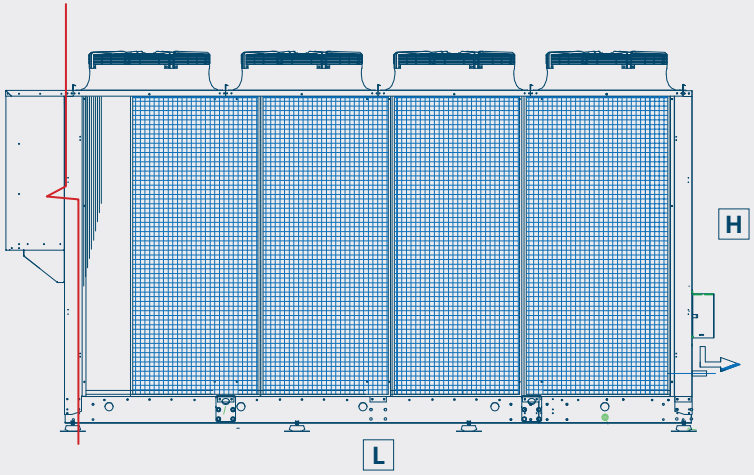

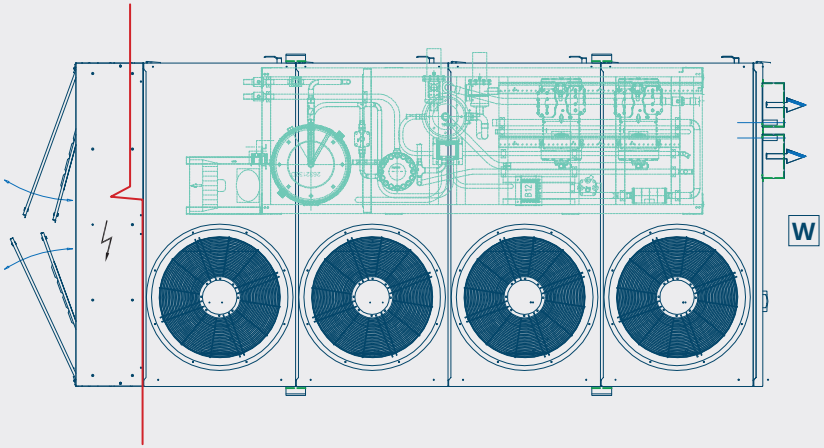

Dim.	L	W	H
4F+4M	4830	2340	2550
4F+5M	5870		
4F+6M	6911		

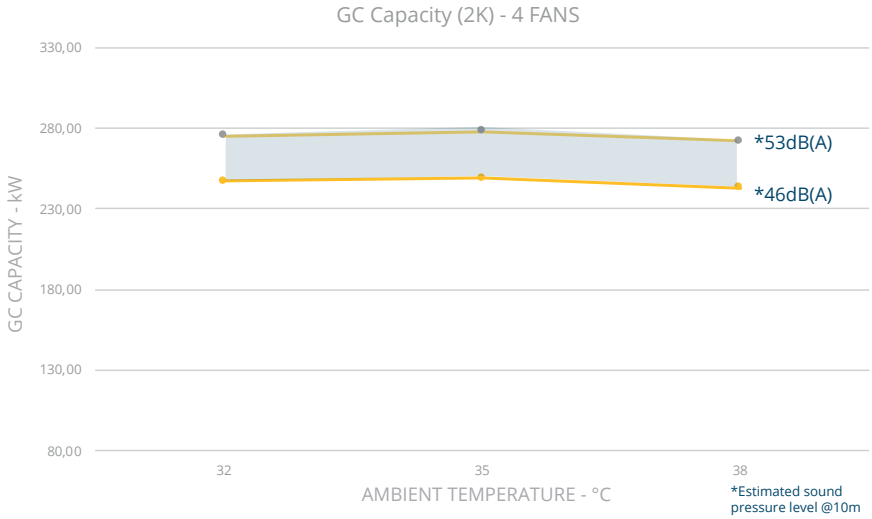

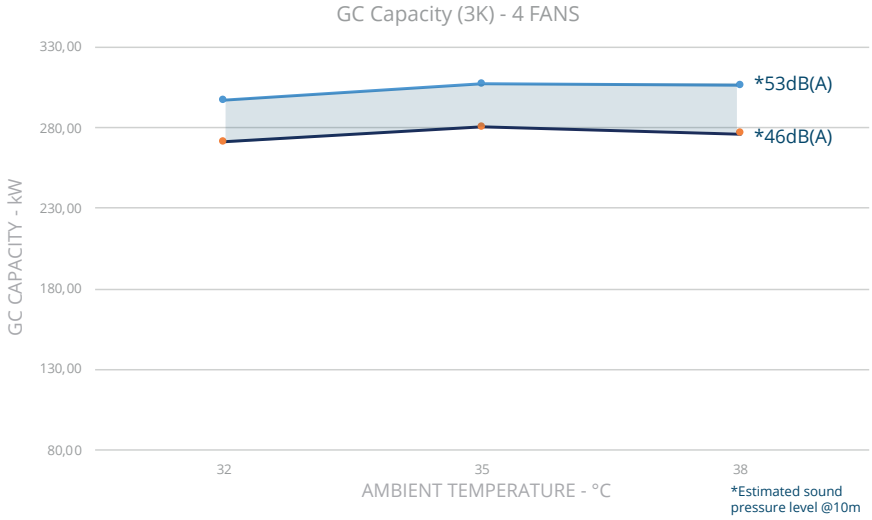

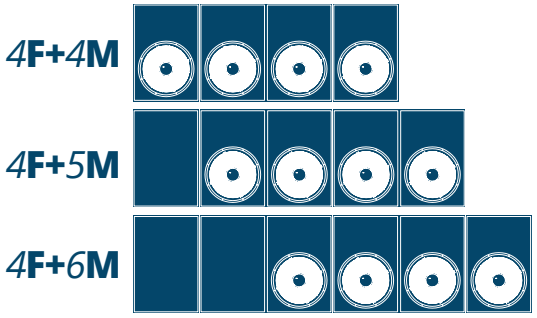

>EIA compliance up to 227kW

4 Fans

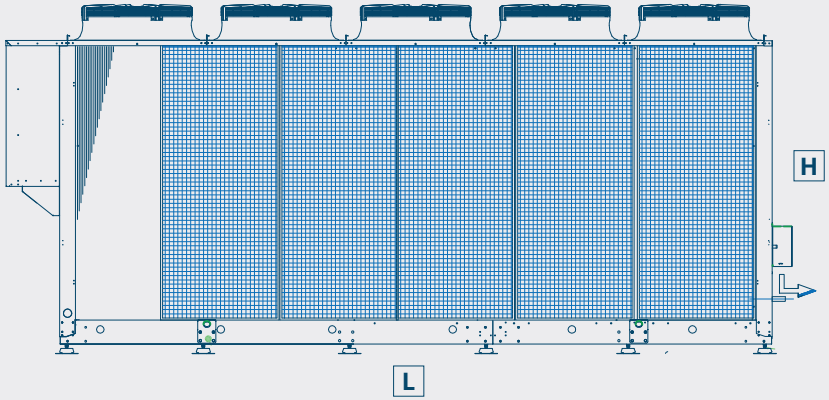

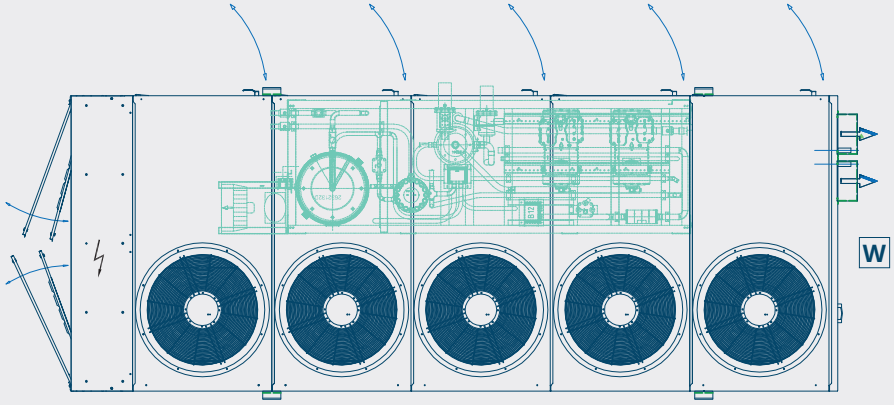

Dim.	L	W	H
5F+5M	5870	2340	2550

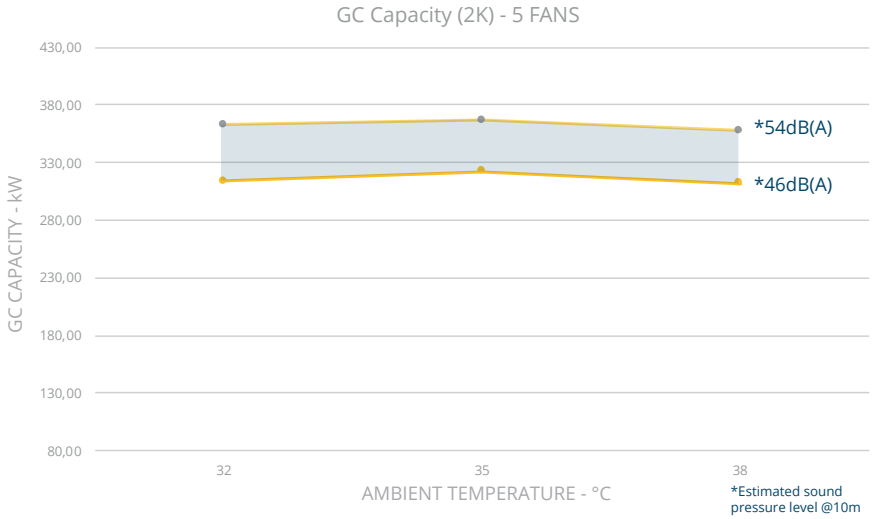

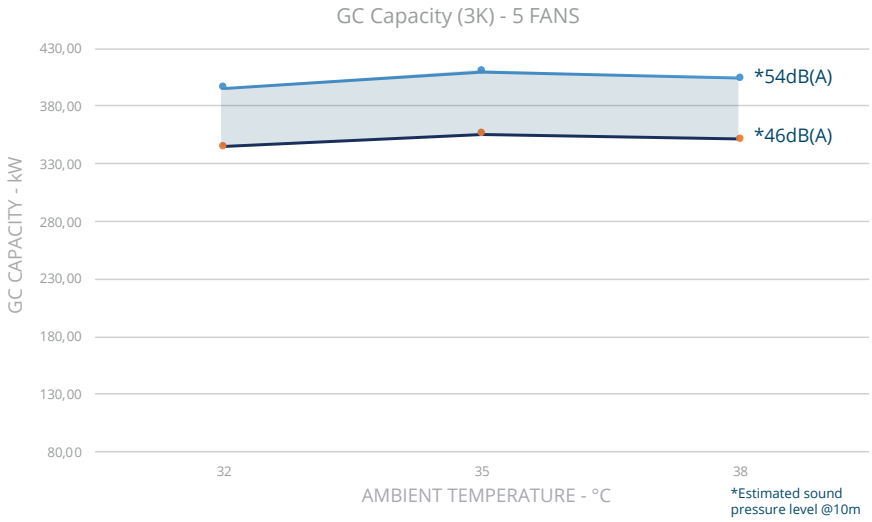

>EIA compliance up to 342kW



5 Fans

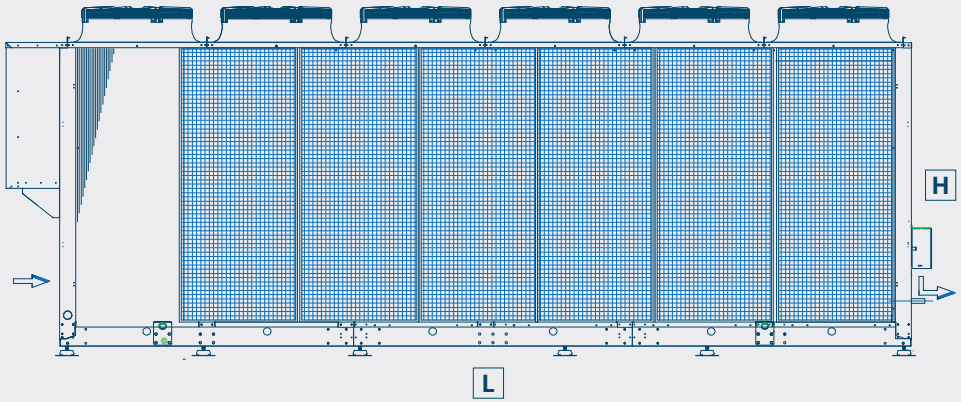

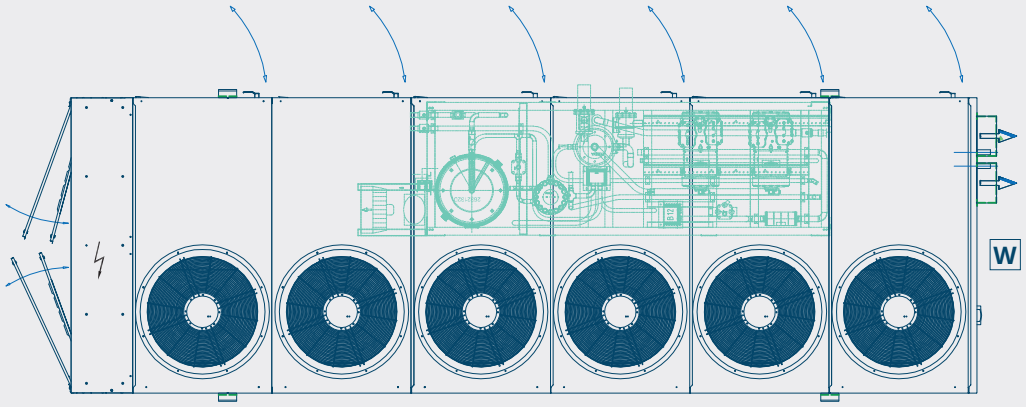

Dim.	L	W	H
6F+6M	6800	2340	2550

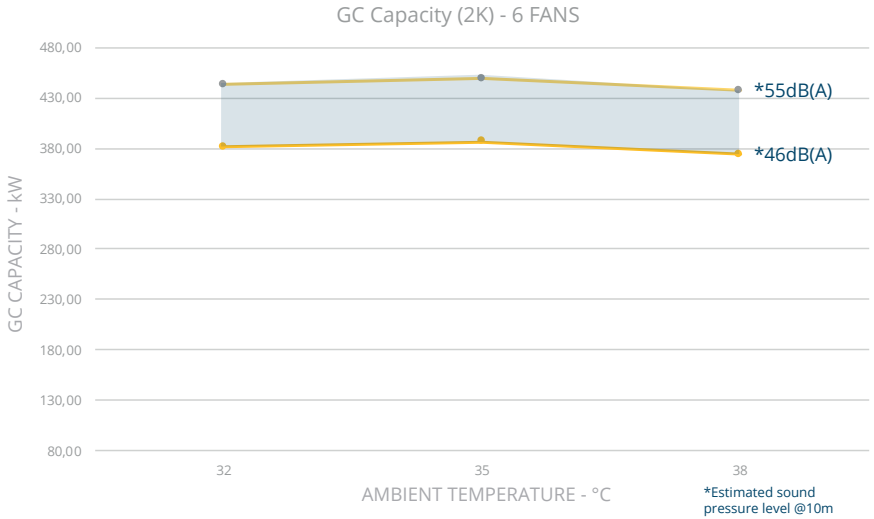

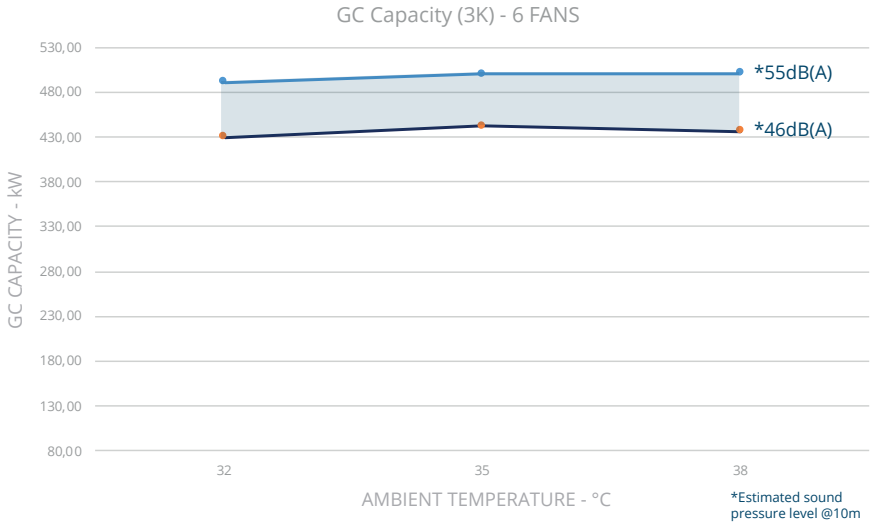

>EIA compliance up to 393kW



6 Fans



www.scmfrigo.com
+39 049 970 5000
info@scmfrigo.com
SCM Frigo S.p.A.
A BEIJER REF Company